Isolated, Linearized RTD Input

3B34

FEATURES

Isolates, amplifies, linearizes, & protects analog input voltages from a wide variety of two-, three- and four-wire Resistor Temperature Detectors (RTDs).

Module provides a constant +10V bridge excitation voltage.

Module provides simultaneous precision voltage and current outputs linear to input temperature.

RTD excitation current and three-wire lead resistance compensation provide a complete signal conditioning solution.

Module circuitry can withstand 220v rms at the input screw-terminals.

All 3B34 series modules are mix-and-match and Hot Swappable.

APPLICATIONS

Industrial signal conditioning

Industrial signal isolation

Industrial signal filtering

PRODUCT OVERVIEW

The 3B Series of Signal Conditioning I/o Subsystems provide a low-cost, versatile method of transferring analog transducer signals to a data acquisition, monitoring or control system without the inherent noise, non-linearity, drift and extraneous voltages. The modules are designed to directly accept analog signals from Thermocouples, RTD's, AC and DC Strain Gages, Torque Transducers, Frequency Transducers, LVDTs, millivolt or process current signals. The modules amplify, isolate, linearize and convert the transducer output signals to standardized analog inputs for high-level analog I/O subsystems. The 3B Series Subsystem consists of a 10" relay rack with universal mounting backplane and a family of plug-in (up to 16 per rack) input and output signal conditioning modules.

Eight and four channel backplanes are also available. Each backplane incorporates screw terminals for sensor inputs and current outputs and a 26-pin connector for high-level single-ended voltage outputs to the user's equipment.

The input modules feature complete signal conditioning circuitry optimized for specific sensors or analog signals and provide two simultaneous high-level analog outputs: 0 to +10V (or ±10V) and 4-20 mA (or 0-20 mA).

FUNCTIONAL BLOCK DIAGRAM

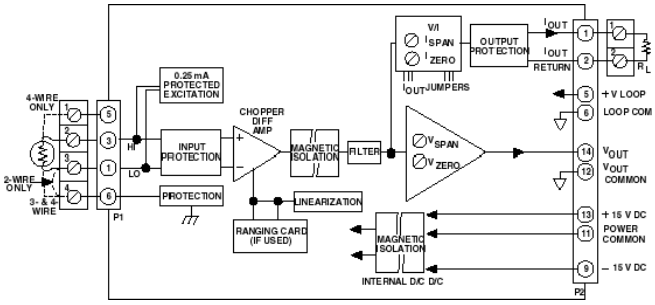

Figure 1. 3B34 Functional Block Diagram

Output modules accept 0 to +10V (or ±10V) single-ended signals and provide an isolated 4-20 mA (or 0-20 mA) process signal. All modules feature a universal pin-out and may be readily hot-swapped under full power and interchanged without disrupting field wiring.

The Analog Devices 3B Series Signal Conditioning Subsystem is designed to easily handle signal conditioning problems in measurement and control applications. Some typical uses are in microcomputer-based data acquisition systems, programmable controllers, analog recorders, dedicated control systems, and any other applications where monitoring of temperature, pressure, flow and analog signals are required. Since each input module features two simultaneous outputs, the voltage output can be used to provide an input to a microprocessor-based data acquisition or control system while the current output can be used for analog transmission, operator interface, or an analog backup system.

Each input module is a single-channel signal conditioner which plugs into a socket on the backplane and accepts its signal from the input screw terminals. All input modules provide input protection, amplification and filtering of the input signal, accuracy of ±0.1%, low drift of ±1 uV/°C (low-level input modules), and feature two high-level analog outputs that are compatible with most process instrumentation. The isolated input modules also provide ±1500 V peak isolation.

The choice of a specific 3B module depends upon the type of input signal. Input modules are available to accept millivolt, volt, process current, thermocouple, RTD, AC and DC strain gage, frequency and LVDT inputs. The voltage output of each module is available from the sysem I/O connector while the current output is available on the output screw terminals.

Rev. 0

Information furnished by Analog Devices is believed to be accurate and reliable. However, no responsibility is assumed by Analog Devices for its use, nor for any infringements of patents or other rights of third parties that may result from its use. Specifications subject to change without notice. No license is granted by implication or otherwise under any patent or patent rights of Analog Devices. Trademarks and registered trademarks are the property of their respective companies.

One Technology Way, P.O. Box 9106, Norwood, MA 02062-9106, U.S.A.
Tel: 781.329.4700 www.analog.com
Fax: 781.326.8703 **© 2004 Analog Devices, Inc. All rights reserved.**

GENERAL DESCRIPTION

The 3B34 is a single-channel signal conditioning module which amplifies, protects, filters, linearizes, and isolates analog input voltages from a wide variety of two-, three-, and four-wire Resistor Temperature Detectors (RTDs), providing simultaneous precision voltage and current outputs, linear to input temperature. RTD excitation current and three-wire lead resistance compensation provide a complete signal conditioning solution. The 3B34 protects its computer side outputs from damage and loss of signal integrity by isolating them up to +1500V peak and shielding its input and excitation circuit from damage from field-side over-voltage faults up to 220V rms. The current output withstands 130V rms without damage and interfaces to user equipment through screw terminals on the 3B Series backplane. The 3B34 is a plug-in, mix-and-match, hot-swappable module, easily field calibrated via front-panel zero and span adjustments for both voltage and current outputs.

3B Series Custom-Ranging Program – Externally-programmable Model 3B34-00, enables the user to configure a special input range by using the optional plug-on AC1310 ranging card, which houses user-supplied resistors to determine zero and span. To facilitate selecting resistors, a Windows program, 3B-CUSTOM, calculates resistor values based on the user-desired input/output ranges.

A differential chopper-stabilized low-drift input amplifier provides stable gain and long-term stability. This enables the use of very low RTD excitation current to minimize self-heating and preserve measurement accuracy. A 250 uA excitation current for platinum and nickel RTDs and a 1mA excitation current for copper RTDs is provided to create an input voltage to the 3B34. For three-wire RTDs, the excitation current flows through the third RTD lead to eliminate the effect of lead resistance with an accuracy of +0.02oC/W. Internal multi-pole low-pass filtering with a 3-Hz cutoff (-3dB) enhances normal-mode and common-mode ejection at 50/60 Hz, enabling accurate measurement of small signals in high electrical noise. The differential input circuit on the field side is fully floating, eliminating the need for any input grounding. Signal isolation is accomplished by transformer coupling using a proprietary modulation technique for linear, stable and reliable performance. A demodulator on the computer side of the signal transformer recovers the original signal, which is then filtered and buffered to provide a low-noise, low-impedance output voltage; this output also drives a voltage-to-current converter to provide a simultaneous current output for interfacing versatility.

Figure 2

3B34 Models Available

Model	RTD Sensor (2,3, or 4-wire)	Input Range	Output Ranges[1]
3B34-00	100 Ω Pt, (alpha) = 0.00385	Externally Programmable [2]	0 V to +10 V & 0 mA to 20 mA
3B34-01	100 Ω Pt, (alpha) = 0.00385	-100°C to +100°C	0 V to +10 V & 0 mA to 20 mA
3B34-02	100 Ω Pt, (alpha) = 0.00385	0°C to +100°C	0 V to +10 V & 0 mA to 20 mA
3B34-03	100 Ω Pt, (alpha) = 0.00385	0°C to +200°C	0 V to +10 V & 0 mA to 20 mA
3B34-04	100 Ω Pt, (alpha) = 0.00385	0°C to +600°C	0 V to +10 V & 0 mA to 20 mA
3B34-Custom	100 Ω Pt, (alpha) = 0.00385	*	*
Model	**RTD Sensor (2 or 3-wire)**	**Input Range**	**Output Ranges[1]**
3B34-C-00	10 Ω Copper, (alpha) = 0.004274	Externally Programmable [2]	0 V to +10 V & 0 mA to 20 mA
3B34-C-01	10 Ω Copper, (alpha) = 0.004274	0°C to +120°C (10Ω @ 0°C)	0 V to +10 V & 0 mA to 20 mA
3B34-C-02	10 Ω Copper, (alpha) = 0.004274	0°C to +120°C (10Ω @ +25°C)	0 V to +10 V & 0 mA to 20 mA
3B34-Custom	10 ΩCopper, (alpha) = 0.004274	*	*
Model	**RTD Sensor (2,3, or 4-wire)**	**Input Range**	**Output Ranges[1]**
3B34-N-00	120 ΩNickel, (alpha) = 0.00672	Externally Programmable [2]	0 V to +10 V & 0 mA to 20 mA
3B34-N-01	120 Ω Nickel, (alpha) = 0.00672	0°C to +300°C	0 V to +10 V & 0 mA to 20 mA
3B34-Custom	120 Ω Nickel, (alpha) = 0.00672	*	*

[1] Output current range may be user programmed to 4 mA to 20 mA using jumper supplied.
[2] Requires AC1310 ranging card.
* Custom Input/Output ranges are available. Refer to configuration guide.

3B34 Specifications
(typical @ +25°C and ±15 V dc, and +24 V dc Power)

Description	Model 3B34
	Input Ranges
Standard Ranges	Refer to Model Table
Custom Ranges	-200°C to +850°C (100Ω Platinum; 2-, 3- or 4-wire) -80°C to +350°C (120Ω Nickel; 2-, 3- or 4-wire) -100°C to +260°C (10Ω Copper; 2- or 3-wire)
	Output Ranges
Voltage	0 V to +10 V (R_L > 2 kΩ)
Current	4 mA to 20 mA or 0 mA to 20 mA (R_L = 0 to 850Ω)[1]
Maximum Current Output Span	0 mA to 31 mA
	Accuracy[2]
Initial @ +25°C	±0.1% Span
Nonlinearity[3]	±0.05% Span
	Stability vs. Temperature

Voltage Output	
Zero	±0.02°C/°C
Span	±25 ppm of Reading/°C
Current Output[4]	
Zero	±25 ppm of Span/°C
Span	±25 ppm of Reading/°C
Zero and Span Adjustment Range[5]	±5% of Span
Input Bias Current	+3 nA
Input Resistance	15 MΩ
	Noise
Input, 0.1 Hz to 10 Hz Bandwidth	0.2 µV rms
Output, 100 kHz Bandwidth	50 µV rms
Bandwidth, -3 dB	3 Hz
Output Rise Time, 10% to 90% Span	200 ms
	Common-Mode Voltage (CMV)
Input-to-Output, Continuous	±1500 V peak, maximum
Transient	ANSI/IEEE C37.90.1-1989
	Common Mode Rejection (CMR)
1 kΩ Source Imbalance, 50/60 Hz	160 dB
Normal Mode Rejection, 50/60 Hz	60 dB
	Sensor Excitation Current
100 ΩPt, 120 ΩNi	0.25 mA
10 ΩCu	1.0 mA
	Lead Resistance Effect
100 ΩPt, 120 ΩNi	±0.02°C/Ω
10 ΩCu	±0.2°C/Ω
	Input Protection (Includes Excitation Currents)
Continuous	220 V rms maximum
Transient	ANSI/IEEE C37.90.1-1989
Voltage Output Protection	Continuous Short to Ground
Current Output Protection	130 V rms, continuous

	Power Supply Voltages [6]
±15 V dc Supplies	
Rated Operation	±(11.5 V dc to 16.5 V dc)
Current	±10 mA
Sensitivity	±0.01% span/V

+24 V dc Loop Supply	
Rated Operation	+12 V dc to +30 V dc
Current	+27 mA @ I_{out} = 20 mA
Sensitivity	±0.0002% span/V
Mechanical Dimensions	3.15" x 3.395" x 0.775" (80.0 mm x 86.2 mm x 19.7 mm)
	Environmental
Temperature Range	
Rated Performance	-25°C to +85°C
Storage	-55°C to +85°C
Relative Humidity, 24 hours	0 to 95% @ +60°C noncondensing
RFI Susceptibility	±0.5% Span error @ 400 MHz, 5 Watt, 3 ft

[1] For a 0 mA to 20 mA range, a typical minimum output current is 10 µA.
[2] Includes the combined effects of repeatability, hysteresis, and nonlinearity.
[3] Linearization conformity error is ±0.05%.
[4] With respect to the voltage output.
[5] A wide range of custom zero suppression and span is available with the 3B30-00 and 3B31-00 models, using the AC1310 ranging card.
[6] +24 V dc loop power is required for driving the current output at loads up to 850Ω. If a current output load of 400Ω or less is applied, +15 V dc is sufficient for loop power. If only voltage output is used, loop power is not required.
Specifications subject to change without notice

PIN CONFIGURATIONS AND FUNCTIONAL DESCRIPTIONS

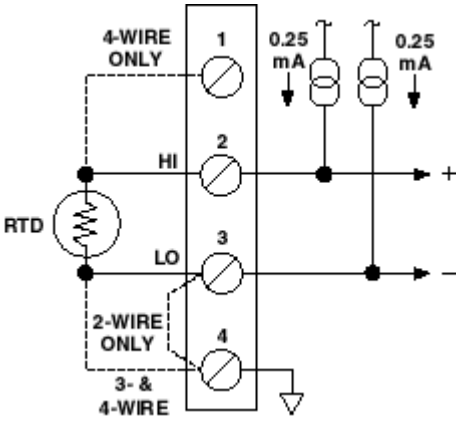

Figure 3 3B34 Input Field Connections

Table 1. Pin Function Descriptions—

Pin No.	Description
1	+EXC
2	HI
3	LO
4	-EXC

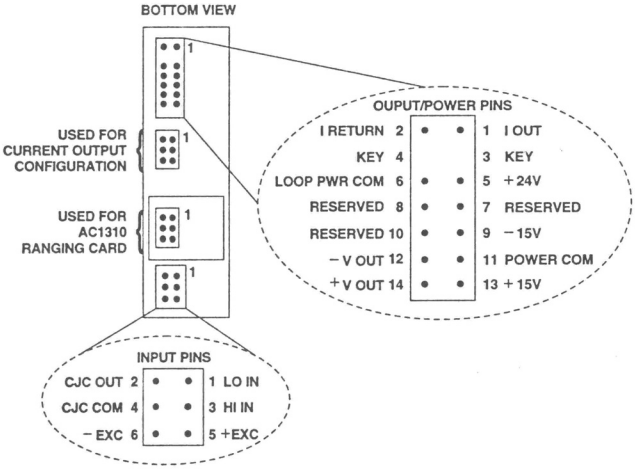

Figure 4 . Model 3B Series Module, with pin-out assignments.

ESD CAUTION

ESD (electrostatic discharge) sensitive device. Electrostatic charges as high as 4000 V readily accumulate on the human body and test equipment and can discharge without detection. Although this product features proprietary ESD protection circuitry, permanent damage may occur on devices subjected to high energy electrostatic discharges. Therefore, proper ESD precautions are recommended to avoid performance degradation or loss of functionality.

OUTLINE DIMENSIONS

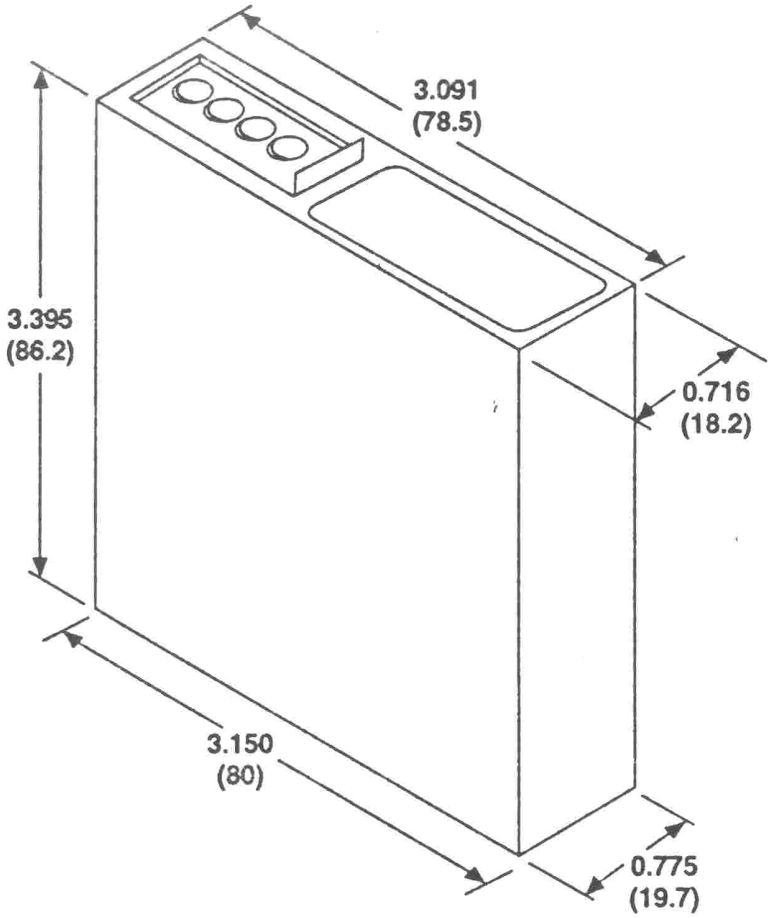

Figure 5. Outline Dimensions

NOTES

© 2004 Analog Devices, Inc. All rights reserved. Trademarks and registered trademarks are the property of their respective companies.
D05115-0-9/04(0)