Technologies/Applications IOS Catalog

IOS Catalog Home
IOS Product Index

7B32 Isolated, Process Current Input

- Functional Description
- Input and Output Ranges
- Available Models
- Specifications
- 7B Series Overview
- Modules
- Backplanes and Mounting Cards
- Accessories
- Ordering Guide

Functional Description

The 7B32 is a single-channel signal conditioning module that interfaces, amplifies and filters a process-current input and provides a protected precision output voltage of either +1 V to +5 V or 0 V to +10 V. Process-current input signals are measured by reading the voltage across an internal 200 Ω protected resistor. Model 7B32 features a nonlinearity of ±0.02% maximum and an accuracy of ±0.1% maximum (±0.01% typical). To accurately measure low level signals in electrically noisy environments, 1500 V rms of galvanic transformer-based isolation with a common mode rejection (CMR) of 105 dB @ 50/60 Hz is provided. Rated to operate with a nominal +24 V DC supply, Model 7B32 is mix-and-match and hot-swappable with other 7B Series input modules, so it can be inserted or removed from any socket in the same backplane without disturbing system power.

Inside the 7B32 Series Module

The floating current input of Model 7B32 is fully protected up to 120 V rms line voltage. A one-pole 100 Hz filter preconditions the voltage signal across the 200 Ω protected input resistor prior to amplification by a low drift amplifier. Amplitude modulation is used to implement transformer isolation (1500 V rms input-to-output and power). Isolated front-end circuitry power is supplied by a DC/DC converter. The output section contains a two-pole low pass filter (-3 dB @100 Hz), a buffer amplifier and a power oscillator. The two-pole output filter and subsequent buffer ensures that a low noise, low impedance (<1 Ω) signal is available at the output to drive loads to 2 kΩ minimum.

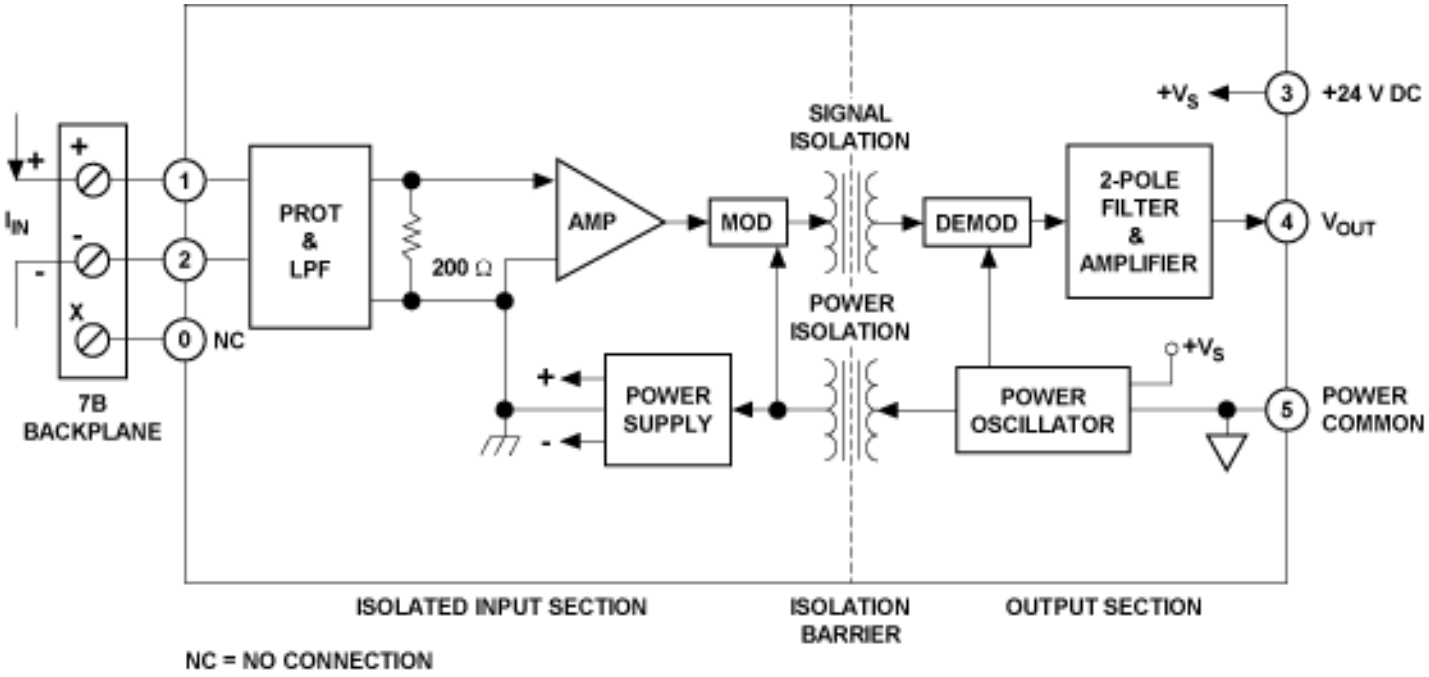

Figure 1. 7B32 Functional Block Diagram

Inputs

- 4 mA to 20 mA
- 0 to 20 mA

Output Options

- +1 V to +5 V
- 0 V to +10 V

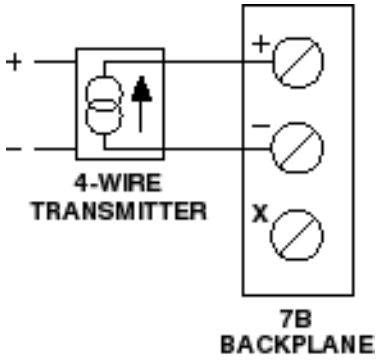

Figure 2. 7B32 Input Field Connections

7B32 Models Available

Model	Input Range	Output Range
7B32-01-1	+4 mA to +20 mA	+1 V to +5 V
7B32-01-2	0 mA to +20 mA	0 V to +10 V

7B32 Specifications

(typical @ +23°C ±5°C and V_s = +24 V dc)

Description	Model 7B32
Input Range[1]	

Standard Ranges	4 mA to 20 mA; 0 mA to 20 mA (Refer to Model Table)
Custom Ranges	Not Available*
Output Range Options (R_L > 2 kΩ)	+1 V to +5 V or 0 V to +10 V
Accuracy[1]	
Initial @ +25°C	±0.01% Span (±0.1% Span, maximum)
Nonlinearity[2]	±0.02% Span, maximum
Input Offset vs. Temperature	N/A[3]
Span vs. Temperature	±35 ppm/°C
Output Offset vs. Temperature	±0.003% Span/°C
Input Resistance	
Power ON	200 Ω
Power OFF	200 Ω, minimum
Output Noise	
5 MHz Bandwidth	6 mV peak
10 Hz to 100 kHz Bandwidth	0.4 mV rms
0.1 Hz to 10 Hz Bandwidth	4 µV peak
Bandwidth, -3 dB	100 Hz
Output Rise Time, 10% to 90% Span	10 ms
Common-Mode Voltage (CMV)	
Input-to-Output and Power	1500 V ms, continuous
Common Mode Rejection (CMR)	
Input-to-Output and Power @ 50/60 Hz	105 dB
Input Protection	120 V rms, continuous ±35 V dc, continuous
Input Transient Protection	ANSI/IEEE C376.90.1-1989 IEEE-STD 472 IEC 255-4, Class II
Output Resistance	< 1 Ω
Voltage Output Protection	Continuous Short to Ground
Power Supply	
Voltage Range, Operating	+14 V dc to +35 V dc
Current	+25 mA, maximum
Sensitivity	±0.0001%/% of Vs
Mechanical Dimensions	1.663" x 2.11" x 0.563" (42.24 mm x 53.6 mm x 14.3 mm)

Weight	60 grams
Environmental	
Temperature Range	
Operating	-40°C to +85°C
Storage	-40°C to +85°C
Relative Humidity, 24 hours	0 to 90% @ +60°C noncondensing
ESD Sensitivity	IEC 801-2, Level 2
RFI Susceptibility	±0.5% Span error @ 400 MHz, 5 Watt, 3 ft

Warm-up time required to meet specifications is approximately 10 minutes.
* Contact factory for OEM requirements.
[1]Includes the combined effects of repeatability, hysteresis, and nonlinearity.
[2]Nonlinearity is calculated using best-fit straight line method.
[3]Input offset term is included in the output offset specification.
Specifications subject to change without notice.

Copyright 1995-1998 Analog Devices, Inc. All rights reserved.